REVISIONS		
ISS	ZONE	DESCRIPTION\PER REQUEST\DATE

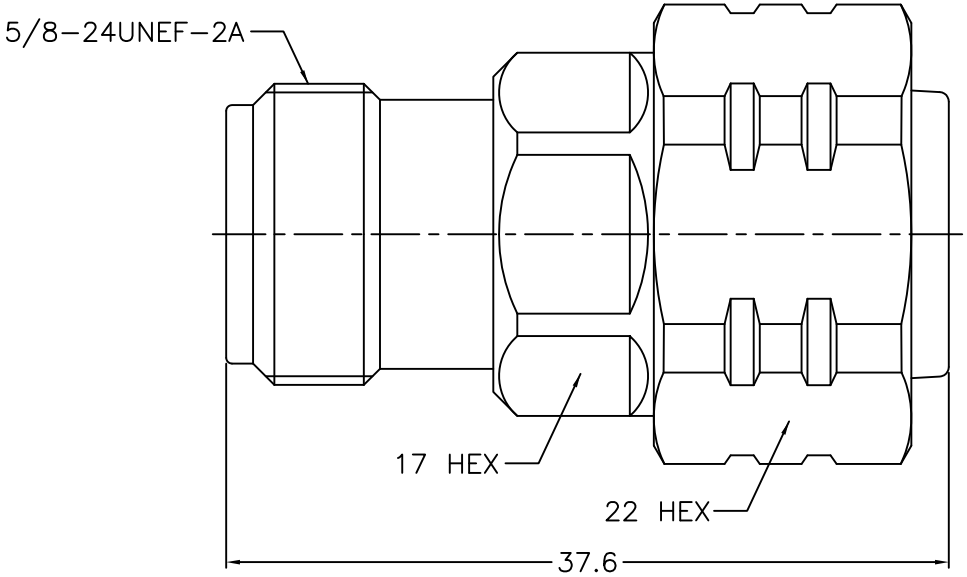

NOTES: FINISH (PLATING THICKNESS IN MICRO–INCHES)
1. BRASS
2. ALBALOY PLATING (COPPER–TIN–ZINC) PL. 80 MIN. THICK
3. BERYLLIUM COPPER
4. SILVER PL. 200 MIN. THICK OVER COPPER PL. 50 MIN. THICK
5. PHOSPHOR BRONZE
6. PTFE

RoHS COMPLIANT

NO.	DESCRIPTION	MATERIAL	FINISH	Q'TY	DRAWING NO.
6	SHELL	NOTE 1	NOTE 2		
5	RETAINER RING	NOTE 5	NOTE 2		
4	GASKET	SILICONE	RED		
3	BODY	NOTE 1	NOTE 2		
2	INSULATOR	NOTE 6	NATURAL		
1	CONTACT PIN	NOTE 3	NOTE 4		

DIMENSIONS ARE IN MILLIMETERS

UNLESS OTHERWISE SPECIFIED TOLERANCES
0.5–6 = ±0.2
6–30 = ±0.4
30–120 = ±0.6
120–315 = ±1
315–1000 = ±1.6
1000–2000 = ±2.4

SCALE 2.5/1 | ISSUE A

PART NO.

APPROVED DATE 08–17–'20

CHECKED DATE 08–17–'20

DRAWN DATE 08–17–'20

G.L.I.

TITLE
N JACK TO 4.3/10 PLUG ADAPTOR

DRAWING NO.
100–NF–4310M–50

FILE NO. R:\D\DWG\100\NF\4310M\50–A